LA401 : BKIDA0394 : B00502 : B00502 CONTROL VALVE [COMPONENT PARTS] ## [4-POSI C/V KIT]

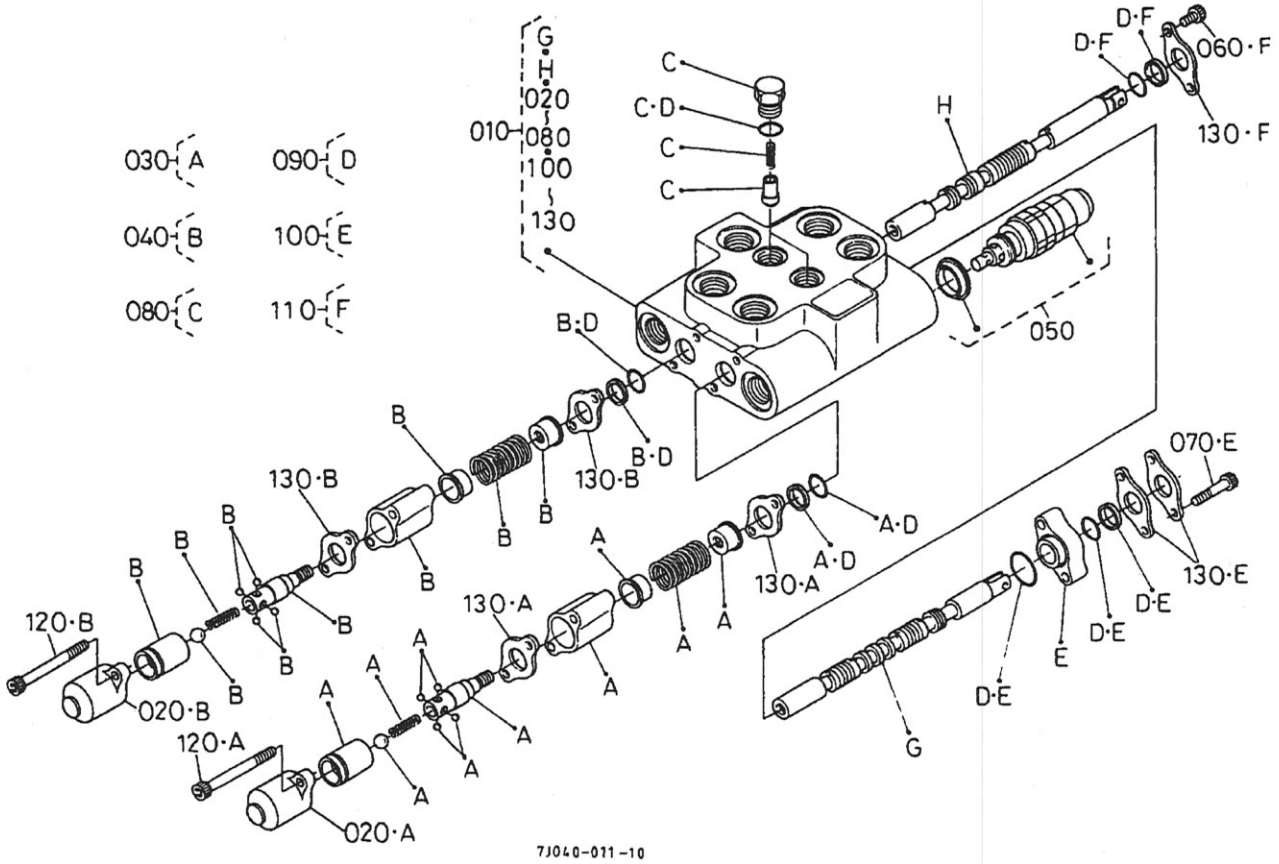

7J040-011-10

Model	Item #	Part #	Super Session	Description	$QTY	Serial #	Remarks	List Price	Extended Price
	010	7J04071010		VALVE,CONTROL	1			$1,927.37	$1,927.37
	020	7554061450		CAP SPOOL	2	<=12410	5028	$15.38	$30.76
	020	7J26661450		CAP-SPOOL(5028-6)	2	=>12411	5028-6	$16.49	$32.98
	030	7553665400		KIT DETENT,FLOAT	1		59221	$161.42	$161.42
	040	7553665100		KIT DETENT,REGEN	1		59222	$169.11	$169.11
	050	7J04061500		ASSY RELIEF VALVE	1			$126.58	$126.58
	060	7553665700		CAP SCREW,SOCKET HD	2		3386	$1.71	$3.42
	070	7554061410		CAP SCREW SOC HD	2		3424	$0.45	$0.90
	080	7553665200		KIT,LOAD CHECK	2		59238	$83.00	$166.00
	090	7553665300		KIT,SEAL	1		59239	$62.62	$62.62
	100	7553665500		KIT UPPER,BOOM SPOOL	1		59223	$80.80	$80.80
	110	7553665600		KIT UPPER,BKT SPOOL	1		59224	$43.01	$43.01
	120	7553665900		CAP SCREW,SOCKET HD	4		5217	$2.84	$11.36
	130	7554061330		PLATE SEAL	7		5012	$2.88	$20.16

									2,836.49